SCHLEIFRING

Slip Ring Solutions | **Modular Systems**

SCHLEIFRING Headquarters in Fürstenfeldbruck, Germany

Quality in Detail

The Modular Principle 4

Technology 5

G200 - The Small One 6

G300 - The Versatile One 7

G400 - The Big One 8

Technical Data 9

Specification 10

System Components 11

The Modular Principle

Standard of highest flexibility

Due to their modular design, the standard G200, G300 and G400 series slip rings offer highest flexibility for the transmission of electrical power, signals, BUS system data and video signals for many demanding rotating applications. A further range of options covering optic and RF rotary joints as well as media rotary joints for air, water and oil rounds off this series.

Modular design

Three basic units and 15 different modules allow for millions of combinations.
The modules can be selected out of a table and used in any combination to meet your requirements. One slip ring system allows the transmission of up to 126 pathways. The housing length of the slip ring system is defined by the number and type of modules stacked. The free inner bores of these series allows optical and RF rotary joints as well as a range of media rotary joints to be combined.

More information at:
http://www.schleifring.de/Modulare-Schleifringsysteme

Technology

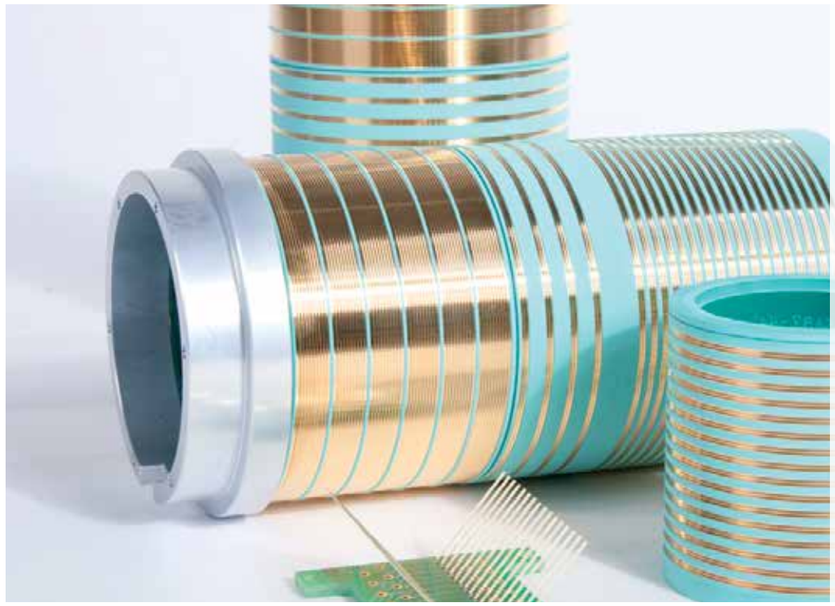

Our gold wire technology guarantees excellent power, signal and data transmission, long service lives and compact slip ring designs. Gold wire brushes slide on gold-plated contact bands with precisely defined V-grooves.

Typical characteristics are:

- Compact designs
- High contact reliability
- Good crosstalk isolation and low electrical noise
- Virtually no wear debris, ensuring long service lives
- Reliable operation under shock, vibration and temperature fluctuations

System components

The free inner bore as well as the mounting options offered by these series allow optional components to be easily integrated:
- Rotor mounting flange
- Single-channel media rotary joint (G 1/4″ and G 1/2″)
- Multi-channel media rotary joints
- RF rotary joints
- Optic rotary joints

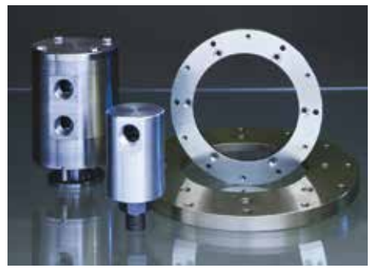

G200 | **The Small One**

The small G200 is characterized by its compact design.
The number of rings being limited to 54, very small installation dimensions can be achieved. The typical application of this slip ring being the control of actuators and valve clusters, the operating voltage was limited to 250 V AC. The slip ring has an 8 mm free inner bore and a G 1/4" thread for the mounting of cost-effective single-channel media rotary joints. 2- and 4-channel air and media rotary joints are optional.
See module selection table on page 9.

Housing	Aluminium with SurTec® surface finish
Outer diameter	90 mm
Free inner bore	8 mm
Total length	L1 = 116 mm, L2 = 192 mm
Optional mounting flange	Ø 120 mm

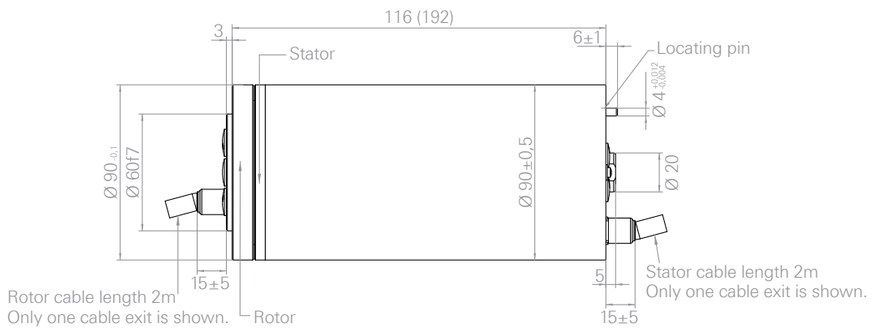

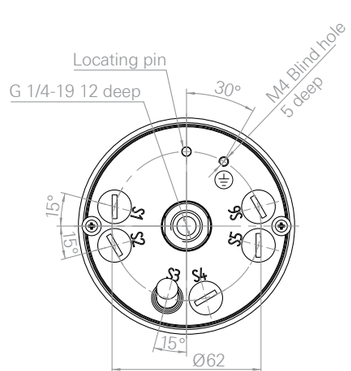

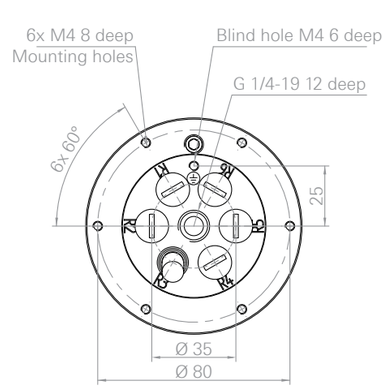

G300 | **The Versatile One**

The all-purpose G300 can solve nearly any problem: From 4 up to 126 rings and up to 630 V AC.
Due to the diversity of different modules, the slip ring can be used in a wide range of applications, such as rotary transfer machines and machine tools with their wide range of functions such as power transmission, sensors und data buses. Different bus data formats can be transmitted in parallel.
To keep the dimensions as small as possible, SCHLEIFRING designed four different lengths for ease of assembly, even under extremely tight installation conditions. The slip ring has a 13 mm free inner bore and a G 1/2" thread for the mounting of competitive single-channel media rotary joints. 2- and 4-channel air and media rotary joints are optional.
For different modules see table on page 9.

Housing	Aluminium with SurTec® surface finish
Outer diameter	140 mm
Free inner bore	13 mm
Total length	L1 = 171 mm, L2 = 247 mm, L3 = 323 mm, L4 = 399 mm
Optional mounting flange	Ø 170 mm

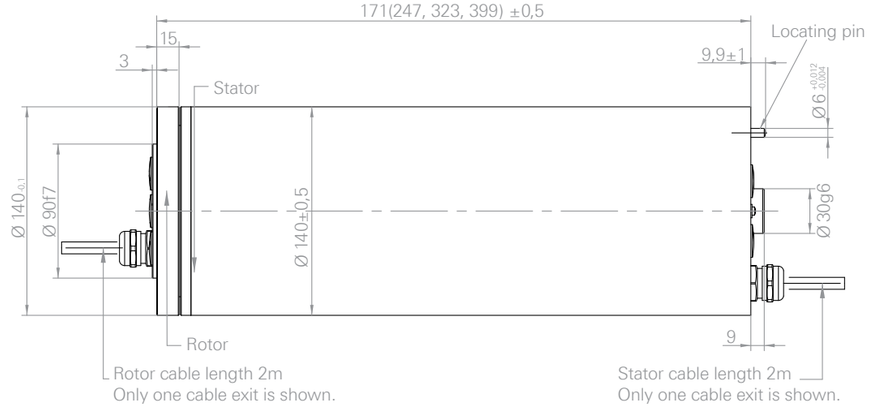

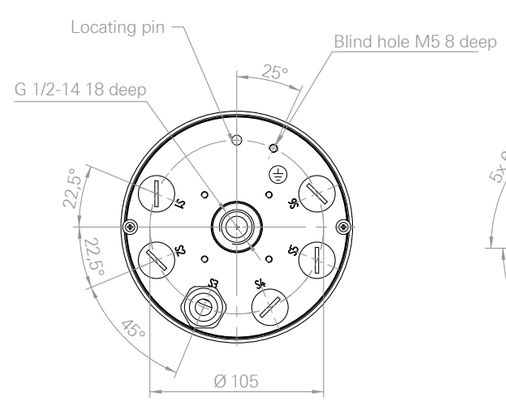

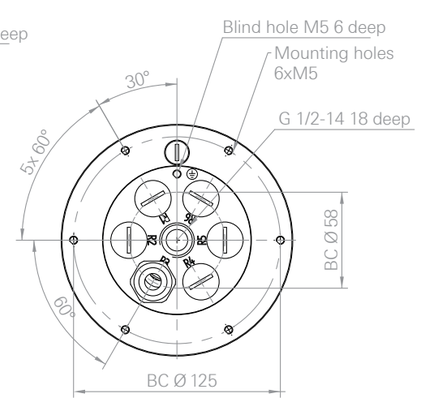

G400 | **The Big One**

The large G400 combines the G300's flexible electrical signal transmission with a 50 mm free inner bore. This slip ring can thus be mounted on existing shafts, allowing enormous design flexibility. The free inner bore can also be used for transmission of up to four G 1/4" or
G 1/2" air or media channels, thereby solving almost every process or cooling problem. Being system components, the media rotary joints are easily attached to the slip ring.
For different modules see table on page 9.

Housing	Aluminium with SurTec® surface finish
Outer diameter	200 mm
Free inner bore	50 mm
Total length	L1 = 186 mm, L2 = 262 mm, L3 = 338 mm, L4 = 414 mm
Optional mounting flange	Ø 250 mm

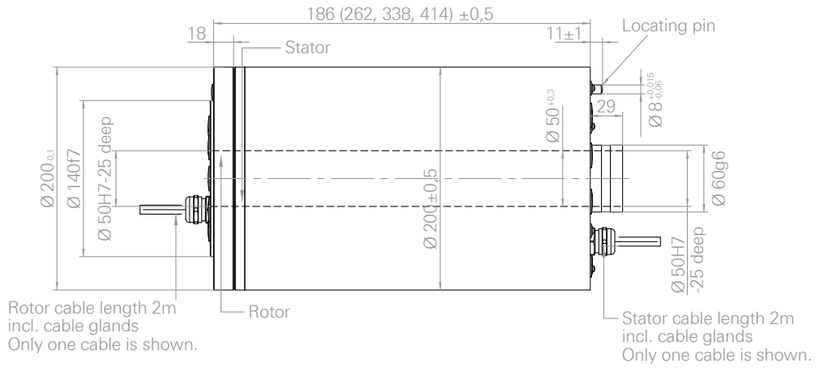

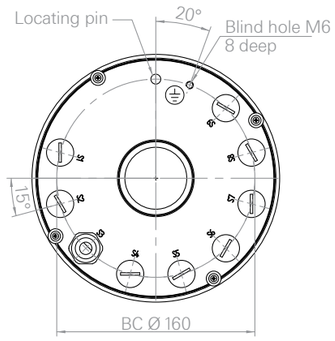

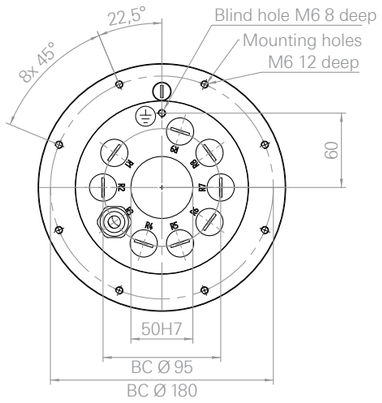

Technical Data | **Modules**

Module	Application	Pattern	No. of rings	Max. operating voltage (V AC)	Max. operating current (A)	Cable
PE	Protective earth	0	1	0	25	Connecting screw
A[1]	Power	2	4	630	25	4 x 4 mm²
A1[1]	Power	2	4	630	25	4 + PE x 4 mm²
B[1]	Power	2	5	400	18	5 x 2.5 mm² (4 + PE)
C	Power	1	4	250	16	4 x 1.5 mm² (3 + PE)
D	Power	1	6	125	9	7 x 0.75 mm²
E	Signal	1	14	30	3	14 x 0.34 mm2 (G200: 14 x 0.25 mm2)
F[1]	Signal	2	16	125	6	16 x 0.5 mm²
G[1]	Signal	2	22	125	3	22 x 0.5 mm²
H	ASI Bus	1	2+4	125	9	2 x 1.5 mm² + 4 x 1 mm²
I	Profibus	1	3+8	30	3	Profibus cable + 8 x 0.24 mm²
K	Signal shielded	1	10+S	30	3	10 x 0.34 mm² + Schirm
L	Controlnet	1	3+8	30	3	RG 59 + 8 x 0.34 mm²
M	CAN Bus	1	5+6	30	3	CAN Bus cable + 6 x 0.34 mm²
N	Interbus	1	7+4	30	6	Interbus cable + 4 x 0.5 mm²
P1	Ethernet 100 Base Tx	1	7+4	30	3	Ethernet cable Cat5e + 4 x 0.34 mm²

[1]Module is not available for the G200 series

Housing length

Module	Type	Pattern	Installation length
G200	L 1	1-2	116 mm
	L 2	3-4	192 mm
G300	L 1	1-3	171 mm
	L 2	4-5	247 mm
	L 3	6-7	323 mm
	L 4	8-9	399 mm
G400	L 1	1-3	186 mm
	L 2	4-5	262 mm
	L 3	6-7	338 mm
	L 4	8-9	414 mm

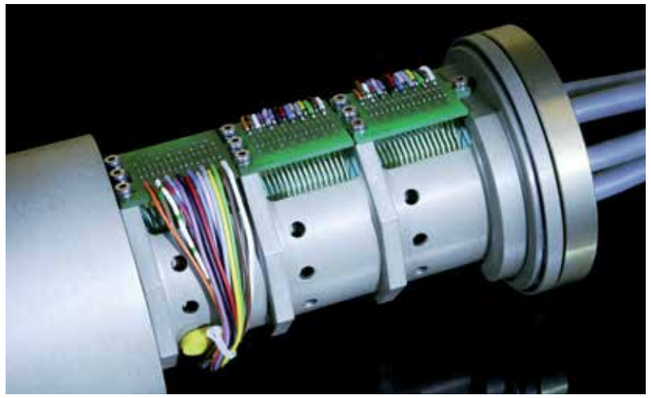

Specification

Series	G200	G300	G400
Mechanical Data			
Housing	aluminium with SurTec® surface finish	aluminium with SurTec® surface finish	aluminium with SurTec® surface finish
Outer diameter	90 mm	140 mm	200 mm
Free inner bore	8 mm	13 mm	50 mm
Installation length	L1, L2	L1 - L4	L1 - L4
Rotational speed	constant 200 rpm intermittent 400 rpm	constant 150 rpm intermittent 300 rpm	constant 80 rpm intermittent 160 rpm
Rotational axis	vertical or horizontal	vertical or horizontal	vertical or horizontal
Protection class	IP 54	IP 54	IP 54
Operating temperature[3]	-20 °C up to +70 °C	-20 °C up to +70 °C	-20 °C up to +70 °C
Torque[1]	< 2 Nm	< 2 Nm	< 2 Nm
Service life	up to 50 million rotations	up to 50 million rotations	up to 50 million rotations
Electrical Data			
Number of rings	up to 54	up to 126	up to 126
Rated current (I_{nom})[2]	max. 16 A	max. 25 A	max. 25 A
Peak current	max. 2 × I_{nom} for 1s	max. 2 × I_{nom} for 1s	max. 2 × I_{nom} for 1s
Rated voltage	max. 250 V AC	max. 630 V AC	max. 630 V AC
Interface stator/ rotor	axial with 2 m cable	axial with 2 m cable	axial with 2 m cable
PE protective earth available	> 50 V AC/ 120 V DC	> 50 V AC/ 120 V DC	> 50 V AC/ 120 V DC
Insulation resistance	100 MW at 500 V DC	100 MW at 500 V DC	100 MW at 500 V DC
System components			
Media rotary joint	1 × G 1/4" 2 × G 1/2" / G 1/4" 4 × G 1/2" / G 1/4"	1 × G 1/4" 2 × G 1/2" / G 1/4" 4 × G 1/2" / G 1/4"	2 × G 1/2" / G 1/4" 4 × G 1/2" / G 1/4"
Optional mounting flange	Ø 120 mm	Ø 170 mm	Ø 250 mm
RF rotary joint		on request	on request
Fiber optic rotary joint		on request	on request

The figures given are maximum values and only apply to some of the designs listed above:
[1]without a media rotary joint
[2]after consultation with the manufacturer, a higher rated current can be attained by connecting two or more circuits in parallel
[3]not at the maximum continuous current rating

Intended use:
Transmission of voltage, power, signals or data from a stationary to a rotating part, assembly or system according to the manufacturer's specifications. A slip ring is a partially completed machine as defined by the Machinery Directive 2006/42/EG Article 1(1). The Machinery Directive 2006/42/EG does not apply to the system as defined in Article 1(2).

System Components

Rotor mounting flange

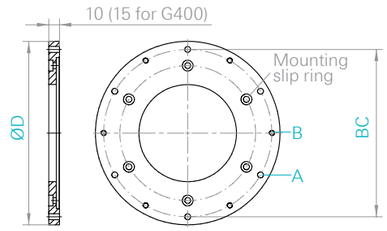

Material: Aluminum with SurTec® surface finish

	D	BC	A	B
G200	120 mm	105 mm	6 x Ø 5.5 mm	6 x M5
G300	170 mm	155 mm	6 x Ø 5.5 mm	6 x M5
G400	250 mm	230 mm	6 x Ø 9 mm	6 x M8

Media rotary joints

Note: Employment of a media rotary joint increases the torque of the overall system.

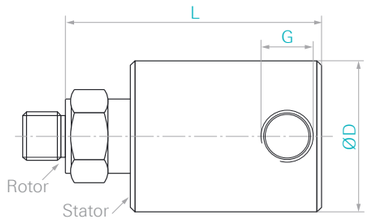

Single-channel media rotary joint for G200 and G300 series

Maximum pressure for air: 10 bar
Maximum pressure for oil/water[1]: 70 bar
Maximum temperature: 70 °C

Dimensions

	G	D	L
G200	1/4"	41.2 mm	69.5 mm
G300	1/2"	57.1 mm	95.5 mm

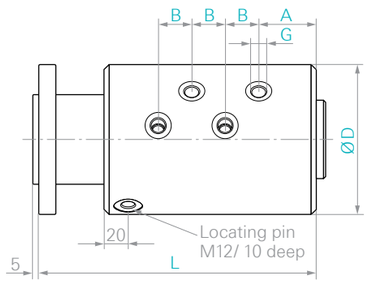

Multi-channel media rotary joint

Maximum pressure for air: 10 bar
Maximum pressure for oil/water[1]: 200 bar
Maximum temperature: 70° C

Dimensions **2-channel media rotary joint**

G	D	L	A	B
1/4"	125 mm	170 mm	48 mm	28 mm
1/2"	160 mm	198 mm	53 mm	32 mm

Dimensions **4-channel media rotary joint**

G	D	L	A	B
1/4"	125 mm	240 mm	48 mm	28 mm
1/2"	168 mm	267 mm	61 mm	32 mm

[1]additional media on request

www.schleifring.de | **www.schleifring.com**

Schleifring und Apparatebau GmbH
Am Hardtanger 10
82256 Füstenfeldbruck
Germany
Fon + 49 8141 403-0
Fax + 49 8141 403- 45
sales@schleifring.de

Schleifring Systems Ltd.
Abex Road
Newbury Berks, RG14 5EY
Great Britain
Phone + 44 1635 36363
Fax + 44 1635 38334
sales@schleifring.co.uk

Schleifring North America, LLC.
1420 Crispin Drive
Elgin Illinois 60123-5533
USA
Phone +1 847 429 9801
Fax +1 847 429 9802
sales@schleifringna.com

Schleifring Transmission Technology (Beijing) Co., Ltd.
Shunyi District, Beijing 101312
P.R. China
Phone: +86 10 57790260
Fax: +86 10 80486486
sales@schleifringchina.cn

09 / 2012